Hydraulik - Ventile - Steuerblöcke

3-way Flow Control with Relief, MP/MR

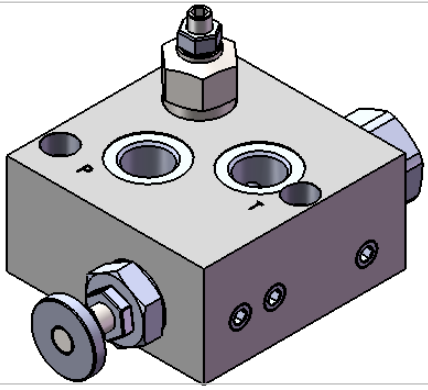

Technical data	
Max. Pressure	250 bar
Max. Flowrate	90 lpm
Regulated flowrate	1-60 lpm
Housing material	Al 2017A or equiv.
Ports	2x G1/2"
Fixtures	2x M8x50 DIN 912
Seals	2x OR 23.6x2.65
Coating	On request

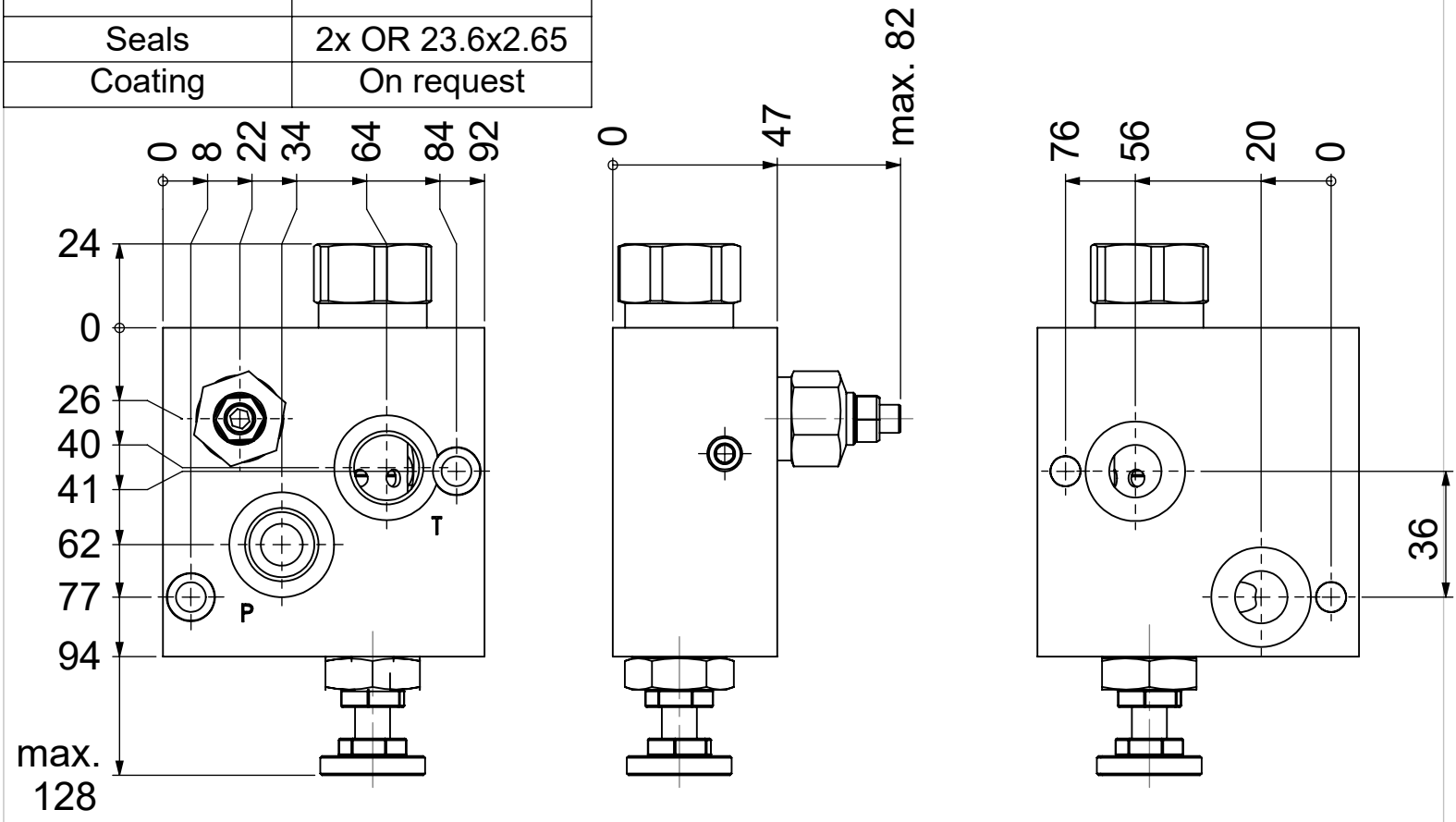

Ordercode:

3RD - R + DBV XXX

XXX - Flowrate setting
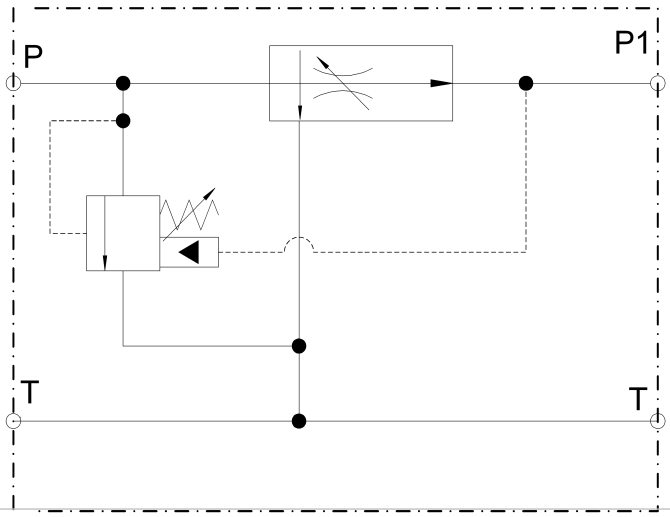
Symbol: